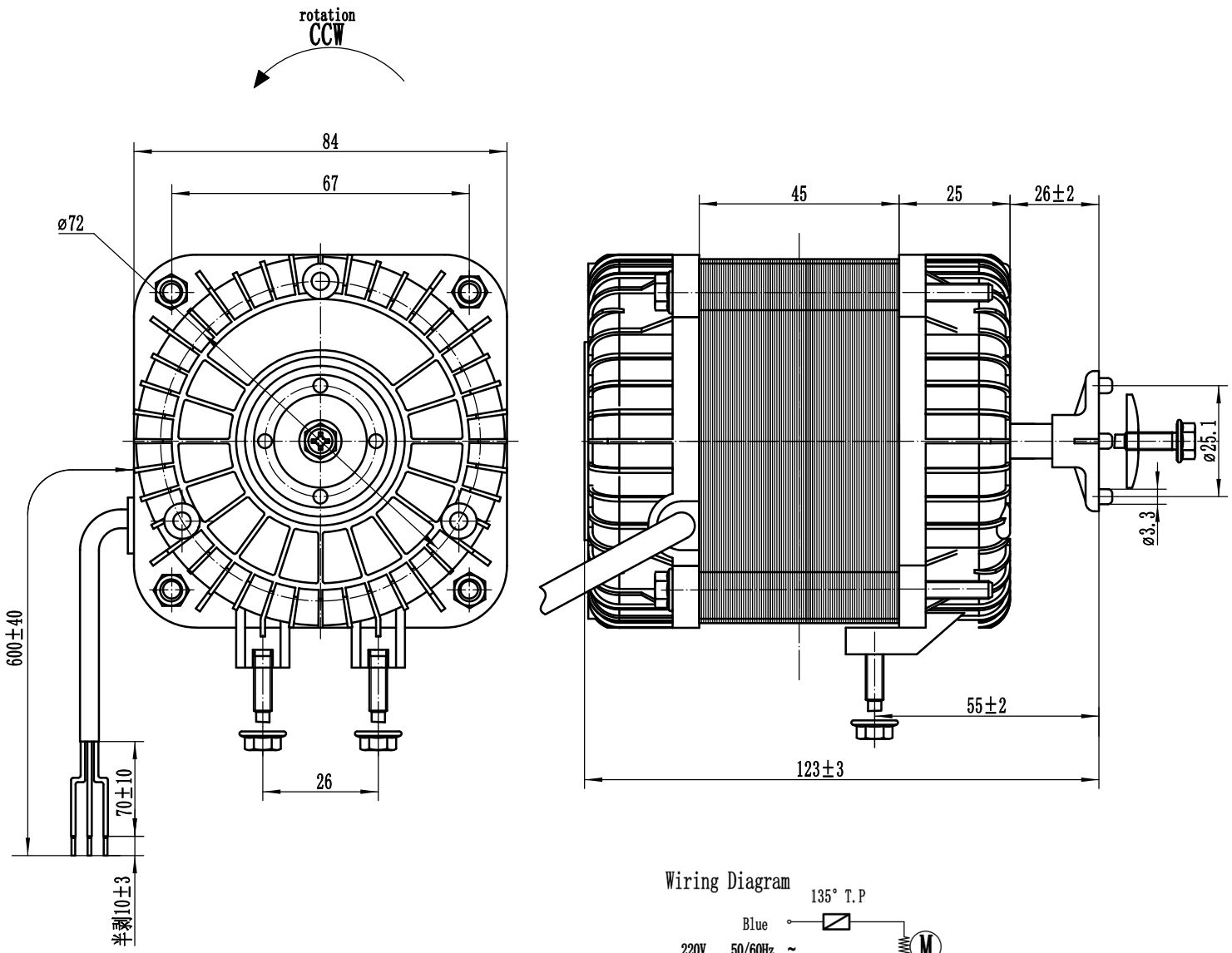

Specification 规格说明

Motor 电机类型	Shaded Pole Motor 罩极异步电动机
Motor Type 电机型号	YZ34-45
Voltage 额定电压 (V)	220
Frequency 频率 (Hz)	50/60
Input Power 额定输入功率 (W)	≤120
Current 额定电流 (A)	≤0.8
Speed 额定转速 (rpm)	1300/1550±150
Load Starting Voltage 负载启动电压 (V)	≤176
Fan Blades 负载 (风叶)	ø300/28°
Rotation 转向	CCW
Airfiow Direction 风向	Sucking or Blowing 吸风或吹风
Motor Protection 电机保护	135° Thermal protected 热保护器
Insulation Class 绝缘等级	B
Temperature Rise 运行温升	≤70K
Protection Class 防护等级	IP 42
Operating Type 工作制	S1
Mounting Type 安装角度	Horizontal or Vertical 水平或垂直
Ambient Temperature 适合环境温度	-30℃——+60℃
Electrical Connection 电源线	3*0.5mm² lead wire
HI-POT Test 耐压	1800V/1S 1mA
bearing 轴承类型	Sleeve bearing 含油轴承
Endplay 轴向窜动	0.5-2mm
Approvals 认证	CE
Weight Per Unit 重量	2.0kg
Packing 包装	46*34*16.5cm 12pcs/CIN

Wiring Diagram

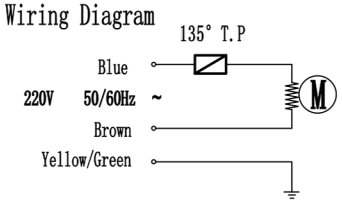

LABEL:

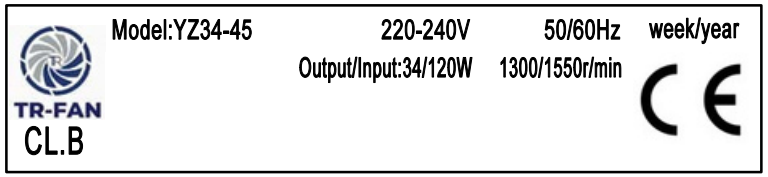

VER 版本号	Marking 标记	NO. 处数	Reason for the CHANGE/更改原因	Change person /更改人	Date of change /更改日期
DRN. BY	Shuang Shi	2026.06.24	CHD. BY		
ENG. BY	Baoan Shen	2026.06.24			
TEC. BY			APP. BY	Hongping Jin	2026.06.24

Stage marker	Weight	Proportion
Page 1 of Several	Page 1 of Few	

YZ34-45

99.01.10.0022